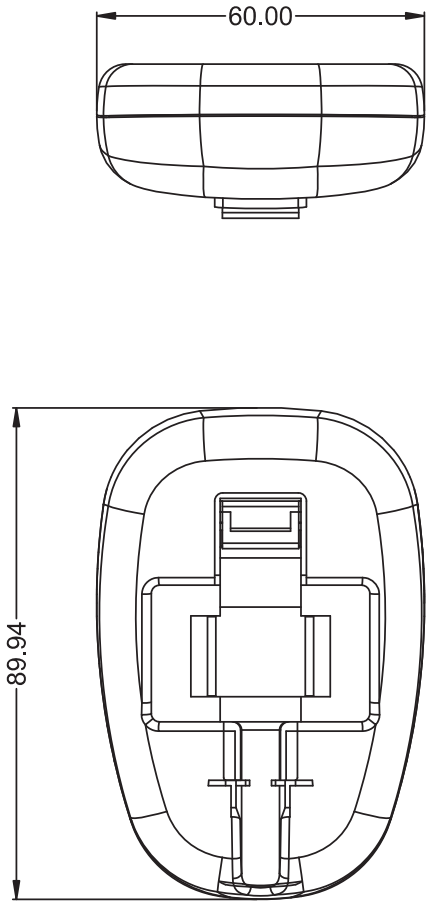

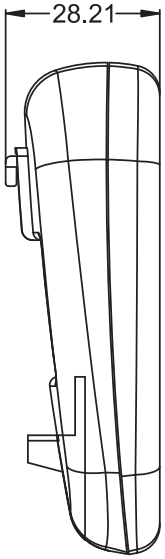

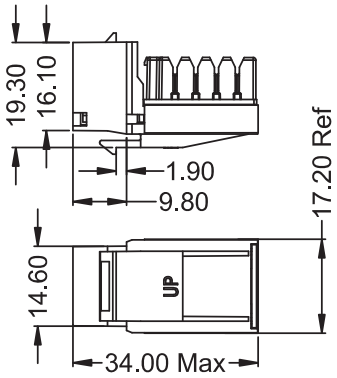

90° Keystone Port size

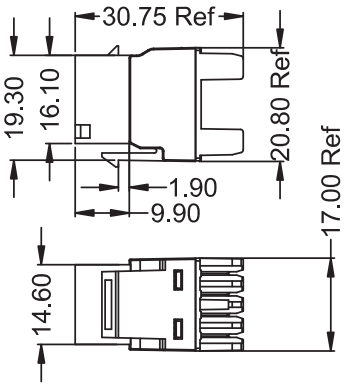

180° Keystone Port size

MECHANICAL:
Operating Temperature:-10°C to +60°C
Storage Temperature:-40°C to +70°C
MATERIAL:
Plastic : ABS

		Title: Keystone Holder black	
Dat	2024 / 05 / 30		
Unit	mm	Item no.	67055
Projection.		Barcode	4043619670550
Rev	A	File No.	88467