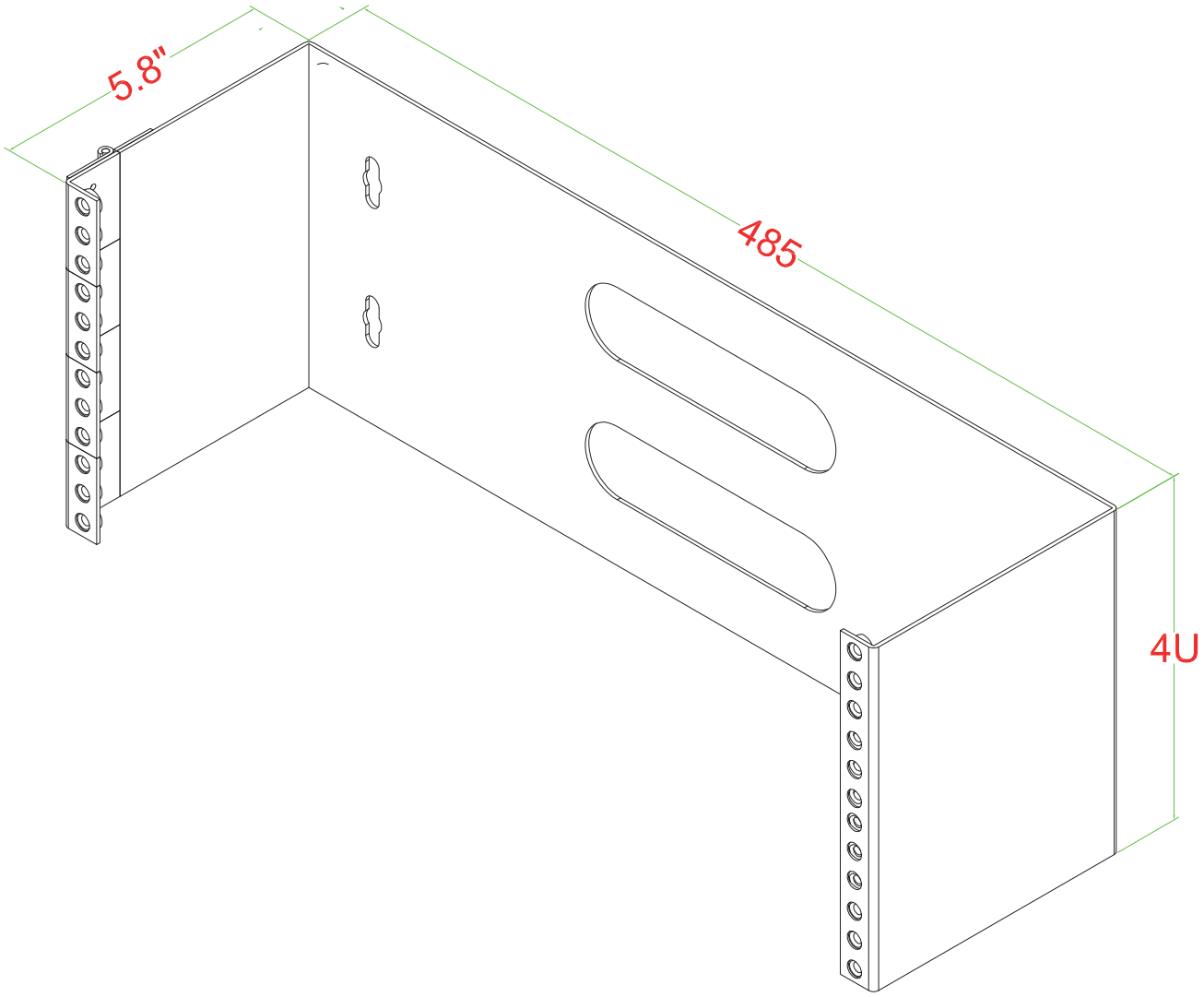

DELOCK
we move the world

Dat	2020 / 11 / 11	Title:	19" Wall Mount Rack 4U
Unit	mm	Item no.	43317
Projection		Barcode	4043619433179
Rev	A	File No.	88145