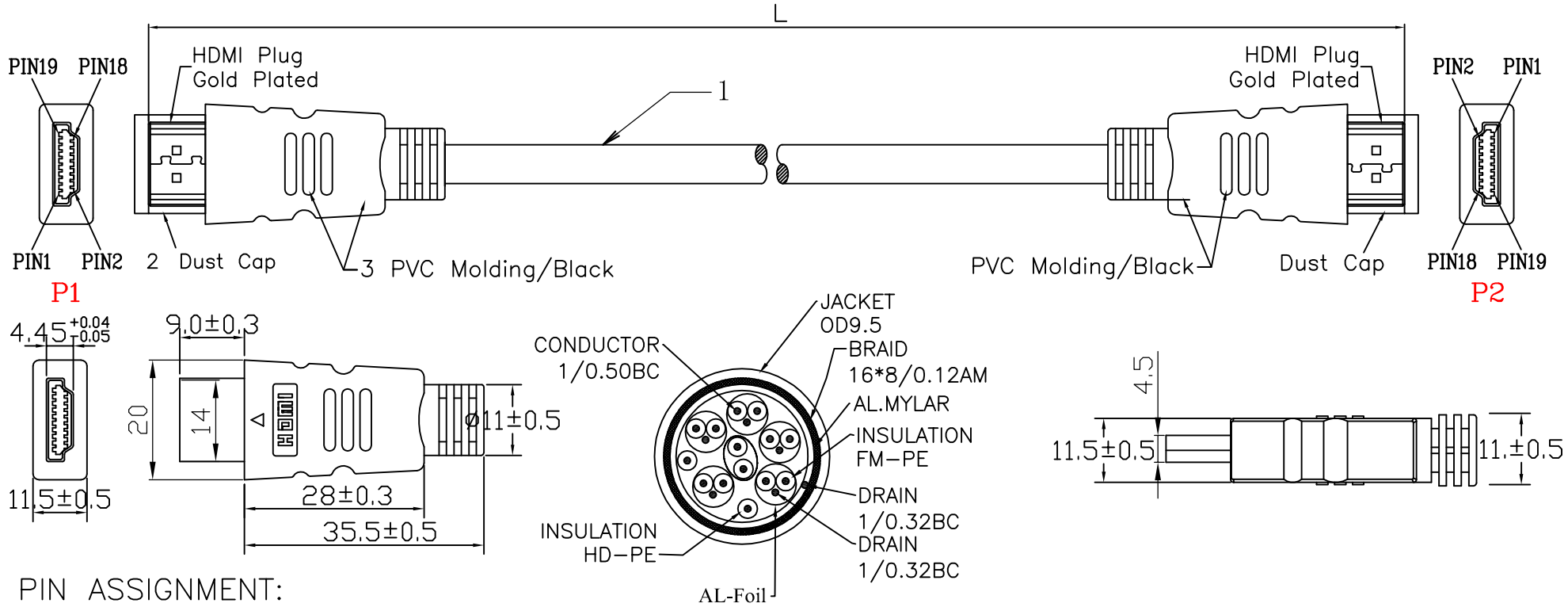

PIN ASSIGNMENT:

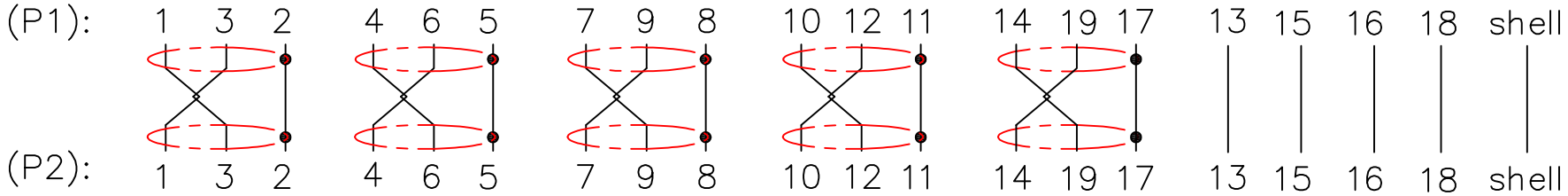

ELECTRONIC TEST:

1. Voltage: DC 300V 5M ohm/10 ms
2. Contact resistance:2 ohm MAX
3. It shall not any open/abort miswiring and intermittent

NOTES:

1. ALL MATERIALS MUST CONFORM TO RoHS STANDARD OF EUROPE

6				PCS
5				PCS
4				SET
3	CONNECTOR	Moulding type black color	14	g
2	CONNECTOR	HDMI MALE GOLD	2	PCS
1	CABLE	1.4a HDMI Cable With Ethernet 24AWG (1P*D+AL)*5C+(1P+1C)*2C*AL+D+B OD9.50COLOUR:BLACK	1	PCS
			Q'TY	UNIT

DELOCK
we move the world

Item no. 82709

Barcode: 4043619827091

File: 88059